THREE WAY DIRECT ACTING SOLENOID VALVE

CODICE ABBREVIATO
SHORT CODE

C28.IP
C38.IP

GENERAL DESCRIPTION / APPLICATIONS

Two way direct acting solenoid valve with spring return.

Suitable for gaseous media compatible with the (body/seals) material used, vacuum.

Not suitable for liquid media.

Forged brass, nickel-plated brass or stainless steel body.

Stainless steel internal parts.

Stainless steel springs.

360° degrees orientable solenoid.

Mountable in any position.

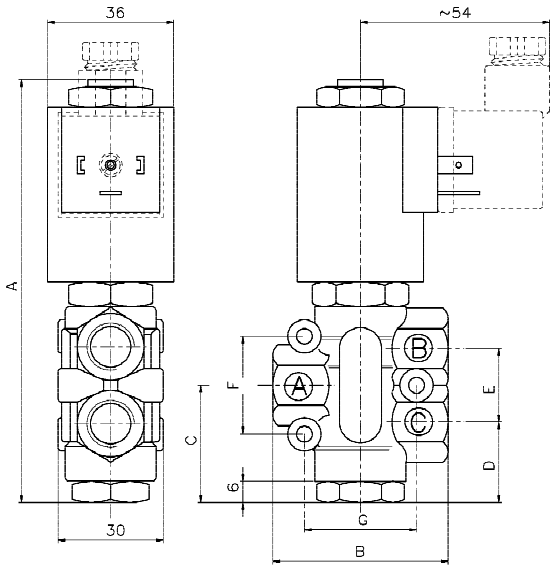

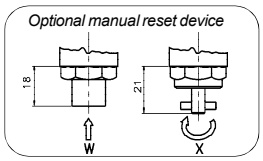

ELECTRICAL INFORMATIONS

Glass-reinforced nylon moulded coil with electrical connection suitable for DIN-43650A plug (2 poles+ground) or "faston" wire terminal.

Nadi type:	B6
Insulation class:	F (155°C) - H (180°C) upon request.
Winding wire class:	H (180°C)
Protection degree:	IP-65 (EN60529 standards) when properly plug connected with DIN-43650A plug.
Duty:	Continuous (S.I.)100% ED
Power consumption(1):	Alternate current 11W *
	Direct current 11W
Voltage tolerance:	± 10%
Insulation:	>1000 Mohm
Dielectrical Strength:	>2000 V/1'
Standard voltages	12, 24, 48, 110, 115, 125, 220, 240 Volt
DC= o AC~(50/60Hz):	other voltages available upon request.

* Alternate current operation *(Vac~) is performed using a direct current coil and a DIN-43650A plug with internal rectifier (Nadi plug cod. 398).*

OPERATION

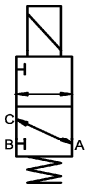

C28 / C38 - Universal

In:	A, B or C
Out:	A, B or C
Vent:	A, B or C
Coil de-energized:	port B closed. port A and C open.
Coil energized:	port C closed port A and B open.

SPECIFICATIONS AND DIMENSIONS

MODEL							ORIFICE DIAMETER mm	PRESSURE IN BAR(2)			Flow factor kv (liters/min.')	WEIGHT Kg.	DIMENSION (millimeters)						
								NOMINAL MAX.	DIFFERENTIAL MIN.	DIFFERENTIAL MAX.			A	B	C	D	E	F	G
	a			b	c	d													
C 2 8		6 0		C		P	6	10	0	10	9	0,9	121	50	33,5	23	21	28	32
C 2 8		6 0		D		P	6	10	0	10	9	0,9	121	50	33,5	23	21	28	32
C 3 8	T N	0 9		E		P	9	10	0	10	16	1,2	140	60	43	28	30	40	40
C 3 8	T N	0 9		T		P	9	10	0	10	16	1,2	140	60	43	28	30	40	40
C 3 8		0 9		F		P	9	10	0	10	16	1,2	140	60	43	28	30	40	40
C 3 8		0 9		G		P	9	10	0	10	16	1,2	140	60	43	28	30	40	40

suffix (options available upon request): (1) "/LC" (low consumption), (2) "/AP" (High pressure version)

a Body material	b Port size	c Seals	d Protection class	e Optional feature
T Brass. N Nickel-plated brass. I Stainless steel.	C 1/4" GAS D 1/4" NPT E 3/8" GAS T 3/8" NPT F 1/2" GAS G 1/2" NPT	0 Buna N 1 FPM 7 HNBR	P IP 65 when properly plug connected with DIN-43650A plug.	Manual reset X stable W instable

Rev. W1- ENG 2009

Le caratteristiche possono subire variazioni senza preavviso / Characteristics may change without notice.

Nadi srl - Via Risorgimento 10 - 20017 Mazzo di RHO (MI) - Italy Tel. +39 02 93900686 - Fax +39 02 93900714 - Internet: www.nadi.it e-mail: nadi@nadi.it