TWO WAY N.O. SOLENOID VALVES
LIFT-ASSISTED PISTON
(direct + servoassisted)

CODICE ABBREVIATO
SHORT CODE

L54.IP

GENERAL DESCRIPTION / APPLICATIONS

Two way normally open direct acting solenoid valve with spring return.

Suitable for gaseous and liquid media compatible with the (body/ seals) material used, vacuum.

Suitable for low differential pressure (zero-differential).

Forged brass, nickel-plated brass or stainless steel body.

Stainless steel internal parts.

Stainless steel springs.

360° degrees orientable solenoid.

Mountable in any position.

DIMENSIONS (in mm)

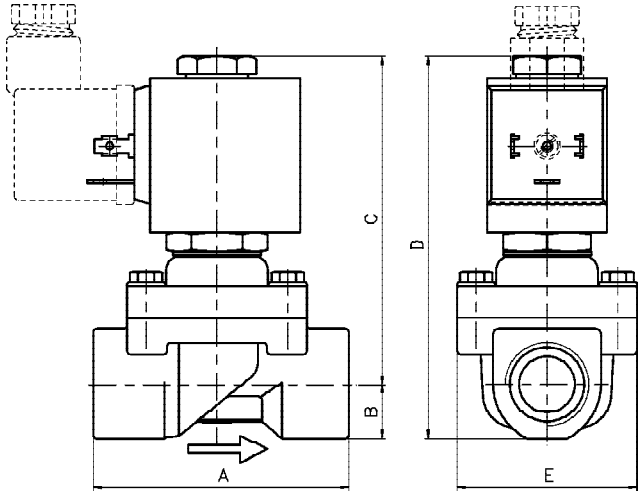

PORT SIZE	DIMENSIONS IN millimeters (mm)				
	A	B	C	D	E
3/8"	64	14	70	84	45
1/2"	64	14	70	84	45

ELECTRICAL INFORMATIONS

Countinuous duty glass-reinforced nylon moulded coil with electrical connection suitable for DIN-43650A plug (2 poles+ground) or "faston" wire terminal.

Coil Type :	B2 (L64 series)
Insulation class:	F (155°C) - H (180°C) upon request.
Winding wire class:	H (180°C)
Protection class:	Waterproof IP-65 (EN60529 standards) when properly plug connected with DIN-43650A plug.
Duty:	Continuous (S.I.) 100% ED
Power consumption (B2)	Alternate Current 10VA (inrush 20VA) Direct Current 8W
Voltage tolerance:	± 10%
Electrical Insulation:	>1000 MOhm
Dielectrical Strength:	>2000 V/1'
Standard voltages	12, 24, 48, 110, 115, 125, 220, 240 Volt
DC= o AC~(50/60Hz):	other voltages available upon request.

OPERATION

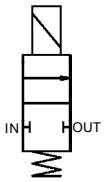

L54 - Normally open

In:	IN
Out:	OUT
Coil de-energized:	from IN to OUT.
Coil energized:	IN and OUT closed.

SPECIFICATIONS AND AVAILABLE OPTIONS

MODEL							ORIFICE DIAMETER mm	NOMINAL MAX.	PRESSURE IN BAR DIFFERENTIAL MIN.	MAX. AC~	MAX. DC=	Flow factor kv (liters/min.')	WEIGHT Kg.
	a		b	c	d	e							
L 5 4		1 2	E T				12,7	16	0	5	5	35	0,6
L 5 4		1 2	F G				12,7	16	0	5	5	40	0,6
									0	5	5	87	0,9

a Body material	b Port size	c Seals material	d Protection class	
T Brass. N nickel-plated brass I Stainless steel * ** available only for 1/2" and 3/4" valve.*	E 3/8" GAS T 3/8" NPT F 1/2" GAS G 1/2" NPT	0 Buna N 1 FPM 3 RULON 6 EPDM	P IP 65 *when properly plug connected with DIN-43650A plug.*	

Rev. W1- ENG 2009

Le caratteristiche possono subire variazioni senza preavviso / Characteristics may change without notice.

Nadi srl - Via Risorgimento 10 - 20017 Mazzo di RHO (MI) - Italy Tel. +39 02 93900686 - Fax +39 02 93900714 - Internet: www.nadi.it e-mail: nadi@nadi.it